(12) INTERNATIONAL APPLICATION PUBLISHED UNDER THE PATENT COOPERATION TREATY (PCT)

(19) World Intellectual Property Organization
International Bureau

(43) International Publication Date
19 May 2016 (19.05.2016)

WIPO | PCT

(10) International Publication Number
WO 2016/075461 A1

(51) International Patent Classification:
F03D 5/00 (2006.01) *B64C 31/06* (2006.01)

(21) International Application Number:
PCT/GB2015/053419

(22) International Filing Date:
11 November 2015 (11.11.2015)

(25) Filing Language: English

(26) Publication Language: English

(30) Priority Data:
1420109.9 12 November 2014 (12.11.2014) GB

(71) Applicant: **KITE POWER SOLUTIONS LIMITED** [GB/GB]; Unit D Mildmay Industrial Estate, Foundry Lane, Burnham-On-Crouch CM0 8SH (GB).

(72) Inventor: **HORNZEE-JONES, Chris**; c/o Aerotrope Limited, New England House, Unit 2, Level 5 South, New England Street, Brighton East Sussex BN1 4GH (GB).

(74) Agent: **PIOTROWICZ, Pawel**; Venner Shipley LLP, Byron House, Cambridge Business Park, Cowley Road, Cambridge CB4 0WZ (GB).

(81) Designated States *(unless otherwise indicated, for every kind of national protection available)*: AE, AG, AL, AM, AO, AT, AU, AZ, BA, BB, BG, BH, BN, BR, BW, BY, BZ, CA, CH, CL, CN, CO, CR, CU, CZ, DE, DK, DM, DO, DZ, EC, EE, EG, ES, FI, GB, GD, GE, GH, GM, GT, HN, HR, HU, ID, IL, IN, IR, IS, JP, KE, KG, KN, KP, KR, KZ, LA, LC, LK, LR, LS, LU, LY, MA, MD, ME, MG, MK, MN, MW, MX, MY, MZ, NA, NG, NI, NO, NZ, OM, PA, PE, PG, PH, PL, PT, QA, RO, RS, RU, RW, SA, SC, SD, SE, SG, SK, SL, SM, ST, SV, SY, TH, TJ, TM, TN, TR, TT, TZ, UA, UG, US, UZ, VC, VN, ZA, ZM, ZW.

(84) Designated States *(unless otherwise indicated, for every kind of regional protection available)*: ARIPO (BW, GH, GM, KE, LR, LS, MW, MZ, NA, RW, SD, SL, ST, SZ, TZ, UG, ZM, ZW), Eurasian (AM, AZ, BY, KG, KZ, RU, TJ, TM), European (AL, AT, BE, BG, CH, CY, CZ, DE, DK, EE, ES, FI, FR, GB, GR, HR, HU, IE, IS, IT, LT, LU, LV, MC, MK, MT, NL, NO, PL, PT, RO, RS, SE, SI, SK, SM, TR), OAPI (BF, BJ, CF, CG, CI, CM, GA, GN, GQ, GW, KM, ML, MR, NE, SN, TD, TG).

Published:

— *with international search report (Art. 21(3))*

WO 2016/075461 A1

(54) Title: A KITE

(57) Abstract: A kite for use in a system for extracting energy from the wind comprises: a wing (1) having a roll neutral point or zone when the kite is in flight; a tether (4) coupled directly or indirectly to the wing; a rigid spar arrangement (2); tensile couplings (3) from the spar arrangement to multiple locations on the wing; and an actuator linkage arrangement (6, 7, 10,11) having a length dimension that can be controllably adjusted. The spar arrangement has first and second attachments (8, 5) to the tether, at the first attachment (8) the spar arrangement is fixed to the tether at a location that is above a roll neutral point or zone of the wing, and at the second attachment (5) the spar arrangement is attached to the tether by the actuator arrangement (6, 7, 10, 11) at a location that is below the roll neutral point or zone of the wing.

A Kite

Field of the Invention

The invention relates to a kite.

Background to the Invention

People have harnessed wind energy for thousands of years. Lately, systems for converting wind energy to other forms of energy and particular electrical energy have become more popular. It is known to use wind turbines to extract the energy from the wind. It is also known to you kites to extract energy from the wind. Kites can fly at altitudes where wind speeds are more reliable than the wind speed at the height of the hub of a wind turbine. The hub height of a wind turbine may be at 80 or 100 m whereas kites can be flown at a height of 400 to 700 m or even higher. With kite-based power generating systems, the majority of the mass is kept near to ground or water level, which minimises bending moments and reduces the mass of the equipment considerably. Repair and service of the equipment is easier as all of this is at low-level. At sea, the equipment can be mounted on towable barges or buoys to allow retrieval to harbour for major repair or service.

A kite system for the extraction of energy from the wind typically includes a kite connected to base unit using a tether. In one type of system, the tether is wound on a drum. The rotation of the drum as the tether is pulled off is used to generate electricity, and at the end of the power cycle the drum is reversed to wind in the tether. In another type of system, a propeller or rotor is provided on the kite and as the wind passes the propeller or rotor the propeller or rotor is used to generate electrical power, which is transmitted down the tether to the base unit.

To efficiently generate power using a kite it is desired to have the kite flying through the air. A static kite on the end of a tether can only produce lift relative to the actual wind speed; however, when the kite is allowed to move lift is increased due to the apparent wind that is created by the motion of the kite relative to the true wind.

A tethered kite has a region of airspace in which it can generate a high tension in the tether. The centre of this region lies directly downwind of the base unit and at an angle of elevation from the base unit dependent on, for example, the design of the kite, the limitations of the power generation equipment and the wind speed. The region in

which the appropriate high tension can be generated will hereinafter generally be referred to as 'the centre of the wind'. If the kite moves away from the centre of the wind, in either azimuth or elevation, the amount of tension it can generate in the tether may be less than optimum from the system for extracting energy from the wind. It is therefore desirable to keep the kite near the centre of the wind and also to control the kite to move at a high speed in the wind. It has been suggested that a suitable flight pattern is obtained when the kite is controlled to fly a figure of eight or continuous loop pattern. If the power is to be generated at ground level and not on the wing then during the power generating phase, when the kite is flying in a loop or figure of eight pattern, line is being continuously pulled off of the drum spinning the electrical generator or pump making power.

When the power stroke is finished, the line needs to be retracted. During the retract stage it is necessary to the force generated by the kite, to reduce the energy requirement and increase overall efficiency. This is generally achieved by flying the kite away from the centre of the wind to the edge of the power generating area, particularly towards the zenith or edge of the window. The closer the position is to 90° off of the wind direction, the lower the resistance to the kite being retracted. Some systems have been proposed that modify the kite in some way to reduce tension during the retraction, but these tend to be complicated arrangements which either significantly increase cost or significantly increase the likelihood of component failure, or both.

Brief Description of the Drawings

Figures 1 and 2 are isometric views of a kite according to a first embodiment of the invention;

Figure 3 is a diagram showing the movement of the tether of the Figures 1 and 2 embodiment from a fully powered to a de-powered position;

Figure 4 shows a second embodiment, with a single spar supported by stabilising lines and not attached directly to the kite;

Figure 5 shows a third embodiment, with a horizontal spar giving further pitch stability;

Figure 6 shows a fourth embodiment, where the main spar extends below a cross beam; and

Figure 7 shows detail of how the control lines can be directed via pulleys so as to stop the angle to the tether going flat and increasing the force on the actuators.

Detailed Description of Various Embodiments

In brief, the invention relates to the improvement of power generated using kites by increasing their controllability. The embodiments provide rigid elements to a flexible aerodynamic structure in order to create attachment points for the tether system configured in relation to the pitch and roll neutral points in order to allow effective control of a generating kite with a balanced low energy system.

In the following, all references to left, right, forwards, backwards, roll, pitch etc. are relative to the kite in its direction of travel when flying.

Referring to the Figures, all the embodiments provide a kite for a system for extracting energy from the wind. The kite comprises a wing 1 for providing lift, a spar arrangement 2 connected beneath the wing 1, and bridle lines or semi-rigid tensile members 3 connected from the spars to the wing 1. A tether 4 is connected to a tether attachment point 5. The tether attachment point 5 is connected by a connection link 14, which is an extension of the tether 4, to a primary connection point 8 on the spar arrangement 2. The tether attachment point 5 is connected also to at least one secondary connection point where an actuator mechanism 6, 7 mounted further down the spar arrangement 2 can influence the kite in pitch or in pitch and roll combined.

The embodiments allow the movement of the tether attachment point of the kite within a controlled area limited by the triangulation between the control lines and their length, and this is facilitated by deflecting the tether attachment point 5. This is achieved without having to move any individual bridle line relative to the wing. It involves control forces which are relatively small compared to the tension in the tether 4 and the connection link 14. Other control methods and equipment can be used in combination with this, for example ailerons or drag flaps, and these other control methods and equipment may reduce the forces required by the actuator mechanism 6, 7 to provide movement of the tether attachment point of the kite within the controlled area.

Referring firstly to Figures 1 and 2, a first embodiment of a kite for a system for extracting energy from the wind is shown. The kite comprises a wing 1 for providing lift, and a rigid spar arrangement 2 connected beneath the wing 1. Bridle lines or semi-rigid tensile members 3 are connected from the spar arrangement 2 to the wing 1. A tether 4 is connected to the spar arrangement 2 and extends to a ground station (not shown). In Figures 1 and 2, the spar arrangement 2 comprises a triangular or A-shaped

structure of three connected spars. The longer spars are connected together at the primary connection point to the wing 1. The longer spars are generally vertical. The shorter spar connects the other ends of the longer spars at lower spar corners. The shorter spar is a cross spar and is generally horizontal.

The more vertical elements of the spar arrangement 2 are kept in a state of compression by action of the bridle lines being placed in tension through the action of the wind upon the wing 1.

There are two attachment points 5, 8 between the spar arrangement 2 and the tether 4, and one of the attachment points includes an actuator system or control mechanism 6, 7 that can adjust a distance between the spar arrangement 2 and the tether 4, to effect control over the kite. For instance, as is explained below, the distance between one lower corner of the spar arrangement and the tether attachment point 5, which is on the tether 4, is adjusted by using the first actuator 6 to shorten or lengthen a first cord that connects the corner of the spar arrangement to the tether attachment point 5. The distance between the other lower corner of the spar arrangement and the tether attachment point 5, is adjusted by using the second actuator 7 to shorten or lengthen a second cord that connects the corner of the spar arrangement to the tether attachment point 5. Thus, by control of the actuators 6, 7 the distance between the cross spar and the tether 4 can be adjusted to adjust the pitch of the wing 1, as is explained below. Also, the lateral position of the cross spar with respect to the tether can be adjusted to adjust the roll of the wing 1, as is explained below.

In particular, a first attachment point 8 is distal to the ground station and proximal to the wing 1, and a second attachment point is distal to the wing 1 and proximal to the ground station. Specifically, the first attachment point 8 is above the roll neutral point of the wing 1 and the second attachment point 5 is below the roll neutral point of the wing 1. The roll neutral point is a location about which the wing 1, if restrained, is neutrally stable about the roll axis when perturbed. The roll neutral point is an aerodynamic property of the lifting surfaces and is not defined by the structural connection point of the bridles or bridle groups. In practice, the roll neutral point changes according to the flying position of the wing 1. For instance, it changes when the wing 1 is pitched to give a different angle of attack into the wind, and changes when there is yaw movement of the wing 1. The roll neutral point exists as a point in a plane

that faces forwards and backwards with respect to the flight. It can be pictured that the roll neutral point can lie anywhere on a line that extends perpendicularly to this plane.

The possible range of movement of the roll neutral point defines a roll neutral zone. Whilst the wing 1 is in a flying state producing lift that is capable of keeping the body in the air, the roll neutral point will always be within the roll neutral zone. The limits of the roll neutral zone are defined by the possible range of movement of the roll neutral point of the wing 1 in a flying state. In the following, the location of components relative to the roll neutral point will be understood to refer to their placement relative to the roll neutral zone, in which the roll neutral point must lie when the kite is in a flying state.

In the Figures 1 and 2 embodiment, the first attachment point 8 is in front of the normal centre of lift - labelled N - of the wing 1 (as can be seen in Figure 3). Put another way, the first attachment point 8 is in front of the pitch neutral position of the wing. This allows the control mechanism 6, 7 to provide pitch control. Pitch control is provided because there is an imbalance or moment for the control mechanism 6, 7 to pull against. As can be appreciated from Figure 3, when lift happens on the wing the whole arrangement attempts to pitch the front of the wing 1 (the nose) downwards. However, this is stopped by the lines of the actuator mechanism 6, 7 connecting to the tether 4 at the attachment point 5. In particular, the wing 1 tries to pitch downwards, attempting to pitch the spar arrangement 2 forwards also, but the control mechanism limits separation of the bottom part of the spar arrangement 2 from the second attachment point 5 to the tether 4. This causes the lines of the actuator mechanism 6, 7 to be placed in tension. The amount of tension depends on the chordwise (fore to aft) distance between the first attachment point 8 and the pitch neutral point, as well as the lift force provided by the wing. The tension results in there being a small kink in the tether and connecting line 14 arrangement at the location of the second attachment point 5.

It will be appreciated that the centre of lift of the wing 1 changes as the angle of attach of the wing 1 into the wind changes. As such, the pitch neutral position also changes. This results in the tension in the actuator mechanism 6, 7 also changing even without any change in wind speed.

Pitch control is useful because it allows the kite to be moved between a high lift position and a low lift position. The high lift position of the kite is best for generating power by

allowing the kite to pay out from a generator-coupled drum at the ground station. The low lift position is best for allowing the kite to be retracted back towards the ground station prior to another power generating cycle. The lift generated by the kite when in the low lift position is indicated at L in Figure 3. It will be seen that the lift force is lower, and also is centred further back in the wing. By controlling the kite to provide low lift when being retracted, the energy required to retract the kite can be reduced.

The connecting line 14/tether 4 is attached to and joins the spar arrangement 2 at the first attachment point 8. At the second attachment point 5, the connecting line 14/tether 4 does not join the spar arrangement 2 but is coupled to it at a distance that is controllable by actuators of the actuator mechanism 6, 7. By suitable control of the actuators, control of the kite in pitch or roll, or pitch and roll combined, is achieved.

A first actuator mechanism 6 includes an actuator coupled via a first tensile link 10 at one end to an arm that is rigidly fixed to a first spar corner and at the other end to the tether 4 at the second attachment point 5. A second actuator mechanism 7 includes an actuator coupled via a second tensile link 10 at one end to another arm that is rigidly fixed to the second spar corner and at the other end to the tether 4 at the second attachment point 5. The length of the first actuator mechanism 6 (or the first tensile link 10 that forms part of it), and thus the distance between the spar corner (and the overall spar arrangement 2) and the second attachment point is adjusted by suitable control of the actuator 6. The same applies to the second actuator mechanism 7 and the second tensile link 10 that forms part of it. The actuators of the actuator mechanism 6, 7 here are in the form of servos or servomotors but may take some other form, such as winches or rams. In general, an actuator controllably adjusts the length of the actuator mechanism 6, 7.

By adjusting the actuators of the actuator mechanisms 6, 7 by the same amount on each actuator mechanism 6, 7, the position of the tether attachment point 5 is directly adjusted. This changes the trimmed pitch angle of the wing 1 in particular by changing the pitch angle of the wing 1 relative to the tether.

By adjusting the actuators of the actuator mechanisms 6, 7 differentially (i.e. making one longer than the other), then the roll of the wing 1 is adjusted in relation to the tether 4.

Both of the above methods can be used to give combined pitch and roll control to the wing in relation to the tether. Rolling of the kite results in steering of the kite, i.e. changing the yaw.

The top of the spar or spars 2 is mounted to the wing 1 in Figure 1. Alternatively, its position relative to the wing is stabilised by a series of rigging lines or members held in tension by the rigidity and lift of the wing 1, as shown in Figure 4.

The Figure 4 embodiment is similar to the Figure 1 embodiment, and like reference numerals refer to like elements. A key difference is that there is only one tensile link 10 between the lower end of the spar arrangement 2 and the connection point 5 to the tether 4. One actuator 6 is configured controllably to alter the length of the first tensile link 10. Thus, the kite of the Figure 4 embodiment is controllable as regards pitch by altering the length of the tensile link 10 but this cannot be used to effect roll control. Roll can be effected using aerodynamic changes to the wing 1 either directly with ailerons for roll, distortion of the wing or indirectly via lines attached between the spar 2 and the wing 1 itself. However, pitch control can be achieved though control of the actuator arrangement 6.The spar arrangement 2 includes a single spar 2, arranged vertically. The spar arrangement is elongate but because there are not plural actuators that need to be spaced apart, no cross spar is needed and so the spar arrangement does not need to be triangular or A shaped.

In Figure 4, the top of the spar 2 is stabilised by a series of rigging lines or members held in tension by the rigidity and lift of the wing 1. This illustrates that the first attachment point 8 does not need to be directly on the wing 1. This technique for separating the attachment point 8 from the wing 1 may be applied to the other embodiments also. In Figure 4, the attachment point 8 may instead be provided directly on the wing 1.

Figure 5 shows a third embodiment, with a horizontal spar or spreader 16 giving further pitch stability. Here, the horizontal spar 16 extends fore and aft. The ends of the horizontal spar 16 are attached to the tether 4 by tether extensions 15. The ends of the horizontal spar 16 also are attached to the connection point 8 by further tether extensions 12. As such, the tether 4 is connected to the connection point 8. It may be considered that the tether 4 is split with the two branches of the split being held apart by the horizontal spar 16. This may be termed a split attaching member. The force

provided by the wing 1 is provided to the tether 4 through the tether extensions 12, 15. Part of this force is applied as a compressive force to the horizontal spar 16.

The spar arrangement 2 is substantially as shown in Figures 1 and 2 except that it is connected to the horizontal spar 16. The spar arrangement 2 is connected to the horizontal spar 16 by fore and aft tensile links 10a, 10b, 11a, 11b. Each actuator 6, 7 is connected by one of the fore and aft tensile links 10a, 10b, 11a, 11b to each end of the horizontal spar.

With the Figure 5 embodiment, the pitch neutral point does not need to be forward of the connection point 8. Instead, the pitch neutral point in normal flight could be in line with the connection point 8. This means that smaller forces are needed to be applied by the actuators 6, 7 in order to effect pitch control. This allows the servomotors or other actuators to control pitch if the system is neutral or unstable about the connection point 8. The same applies to roll control.

With the Figure 6 embodiment, the main spar arrangement 2 extends below a cross beam. This allows connection of the bridle lines 3 to the spar arrangement as a point below the positions of the actuators 6, 7 and the tensile links 10, 11.

In Figure 6, the wing 1 is rigid and so fewer bridle lines 3 are needed. Such a rigid wing 1 may be applied to the other embodiments also.

Maintaining its position in front of the centre of effort of the wing 1 (the centre of effort is shown as the position of the lift N in Figure 3 but there is a centre of effort in the wings of all of the Figures), the bottom of the spar arrangement 2 of the Figure 6 embodiment is below the roll neutral zone of the wing 1. The relative position of the tether 4, in particular the attachment point 5, in relation to the spar or spars 2 is controlled by the actuators of the actuator mechanisms 6, 7.

In the embodiments of Figures 1-3, 5 and 6, the connection point 8 may be provided by attachment of the spar arrangement 2 to a central rib, that can be rigid or inflated, surface attachment on the wing, attached to the top end of the spar. The position of the connection point 8 is governed by the pitch neutral point of the wing in the chordwise direction, except as regards the Figure 4 embodiment. The larger the pitch moment that is created by the chordwise distance between the connection point 8 and the pitch

neutral point, the more stable the arrangement is but also the greater is the force requirement of the actuators 6, 7.

The system is designed so that the wing has a lift (effort) vector that, when the kite is in a flying state, creates tension in the tensile links 10, 11 between the second attachment point 5 and the actuators of the actuator mechanisms 6, 7 giving the arrangement natural stability in pitch and roll in most operational conditions. Extreme conditions of gusts or flight manoeuvres may cause transient slackness to develop in one of the tensile links 10, 11.

With two tensile links 10, 11and two actuators 6, 7, the kite can be rolled. As the bottom of the spar arrangement 2 is below the roll neutral point of the system, the kite is naturally roll stable. By shortening the length of the tensile link 11 from the actuator 7 and lengthening the tensile link 11 from the actuator 7 to the tether attachment point 5, the spar arrangement 2 is moved to the left. This introduces a roll to the left. Upon reversing the control inputs, the spar arrangement 2 moves to the right, introducing a roll to the right.

The spar or spars of the spar arrangement 2 may be a single item or any arrangement of rigid members that give a compressive element between the bridle attachment point or points and the top of the compressive element. This applies whether it is directly attached to the wing or indirectly supported (as in Figure 4).

The spars, cross braces and spreaders can be manufactured out of aluminium, glass fibre, carbon fibre or any material that is able to create a lightweight compression strut. The shape of these members should be designed to give high compression strength with low weight and aerodynamic drag.

In the example given in Figures 1 and 2, spars are aerodynamically formed with cross braces and rigging wires, this arrangement gives a very light stiff structure. By giving the spars aerodynamic form, they are also given fore and aft depth which assists in stiffness in this direction. Other examples of shapes that could be used for spars are double tapered spars or aerodynamic spars with spreader bars and aerodynamic rigging. In Figure 6, an attached spreader bar is shown with diamond rigging wires.

In arrangements with multiple spars (see Figures 1 and 2 for instance) or a single vertical spar with lateral extensions (see Figure 6 for instance), the actuators 6, 7 are able to either fully or partially control of roll as well as pitch.

Due to the addition of a compression member or members the entire bridle arrangement is kept stable and in tension. There are no pulleys required within the bridle system so the bridle lines can have profiles with low aerodynamic drag.

The systems described here are far more stable and far less prone to fatigue than standard kite systems. This system does not exclude pulleys and moving bridle lines, which may be used to distort wing surfaces or control surfaces on the wing.

The actuators may be mounted almost anywhere within the system as there is only a requirement to attach the lines to attachment point 5.

Small line winches can be fitted as actuators 6, 7, or alternatively pulleys 12 may be used with lines leading to winches or linear actuators or hydraulic rams within the primary spars 2. This is shown in Figure 7.

The spar arrangement 2 can be used for the fitting of lighting. Lights can also be fitted so that optical sensing can be used for the final docking manoeuvres. Cavities within the spars can be used for the mounting of avionics and communication equipment, for example sensing platforms incorporating GPS, inertial measurement equipment, radar, radio triangulation transponders, communication equipment, batteries, super capacitors and all other ancillary equipment.

Local power for running the avionics and controls can be generated by fixing a small turbine low down or at the bottom of the spar arrangement 2. This gives the local power generation arrangement stability that is difficult to gain without the rigid spar arrangement 2. The turbine adds drag, which can assist in pitch stability in the wing 1.

The bridle lines 3 can be arranged in any suitable way. For instance, they may be continuous from the wing down to the bottom of the spar arrangement 2 (as in Figure 5), grouped (as in Figure 4), or, if the wing is of high rigidity, minimal bridling can be fitted (as per Figure 6).

In operation the kites described above are capable of rapid changes in angle of attack while maintaining flight stability, allowing the kite to fly more directly back towards the base station when not generating power, thereby reducing the time and therefore the losses in the system.

The fitting of a swivel 13 in the tether 4 avoids undue twisting of the tether should a circular flight pattern be preferred over a figure of eight flight pattern.

The spar arrangement 2 may store energy storage devices, avionics, sensors, communications equipment, and/or antennae (not shown).

The spar arrangement may house lighting. The lighting can be useful to assist positioning the kite during docking and launching sequences.

Various alternatives and modifications will be apparent to the skilled person. The scope of protection is limited by the attached claims and not by the above description.

Claims

1. A kite for use in a system for extracting energy from the wind, the kite comprising:

a wing (1) having a roll neutral point or zone when the kite is in flight;

a tether (4) coupled directly or indirectly to the wing;

a rigid spar arrangement (2);

tensile couplings (3) from the spar arrangement to multiple locations on the wing; and

an actuator linkage arrangement (6, 7, 10 ,11) having a length dimension that can be controllably adjusted,

wherein:

the spar arrangement has first and second attachments (8, 5) to the tether,

at the first attachment (8) the spar arrangement is fixed to the tether at a location that is above a roll neutral point or zone of the wing, and

at the second attachment (5) the spar arrangement is attached to the tether by the actuator arrangement (6, 7, 10, 11) at a location that is below the roll neutral point or zone of the wing.

2. A kite according to claim 1, wherein the actuator linkage arrangement is controllable to adjust a distance between the second attachment and the spar arrangement, to effect pitch control of the kite.

3. A kite according to claim 1 or claim 2, wherein the spar arrangement has a cross spar that extends in a width direction of the wing, wherein the actuator linkage arrangement includes first and second actuator linkages that are connected to the cross spar at different positions in the width direction of the wing, and wherein the first and second actuator linkages are controllable to adjust an angle between the spar arrangement and the tether in the fore and aft direction of the wing, to effect roll control of the kite.

4. A kite according to claim 3, wherein the actuators are mounted onto the cross spar or other spars where they meet the cross spar.

5. A kite according to claim 3, wherein the actuators are mounted on extensions to the cross spar or other spars where they meet the cross spar.

6. A kite according to any preceding claim, comprising a chordwise spar arranged to split the tether fore and aft.

7. A kite according to any preceding claim, wherein the first attachment comprises a direct attachment between the spar arrangement and the wing.

8. A kite according to claim 7, wherein the spar arrangement is connected to a central rib of the wing at the first attachment.

9. A kite according to any preceding claim, where the spar arrangement houses energy storage devices, avionics, sensors, communications equipment and/or antennas.

10. A kite according to any preceding claim, where the spar arrangement houses lighting.

11. A kite according to any preceding claim, where lighting is used to assist positioning the kite during docking and launching sequences.

12. A kite comprising:

a wing (1);

a tether (4) coupled directly or indirectly to the wing;

a rigid spar arrangement (2) having first and second attachments (8, 5) to the tether;

tensile couplings (3) from the spar arrangement to multiple locations on the wing; and

an actuator linkage arrangement (6, 7, 10 ,11) having a length dimension that can be controllably adjusted,

wherein:

at the first attachment (8) the spar arrangement is fixed to the tether, and

at the second attachment (5) the spar arrangement is attached to the tether and separate from the tether by a distance that is adjusted by control of the actuator arrangement (6, 7, 10, 11).

13. A kite according to claim 12, wherein the spar arrangement has a cross spar that extends in a width direction of the wing, wherein the actuator linkage arrangement includes first and second actuator linkages that are connected to the cross spar at different positions in the width direction of the wing, and wherein the first and second actuator linkages are controllable to adjust an angle between the spar arrangement and the tether in the fore and aft direction of the wing, to effect roll control of the kite.

14. A kite according to claim 13, wherein the actuators are mounted onto the cross spar or other spars where they meet the cross spar.

15. A kite according to claim 13, wherein the actuators are mounted on extensions to the cross spar or other spars where they meet the cross spar.

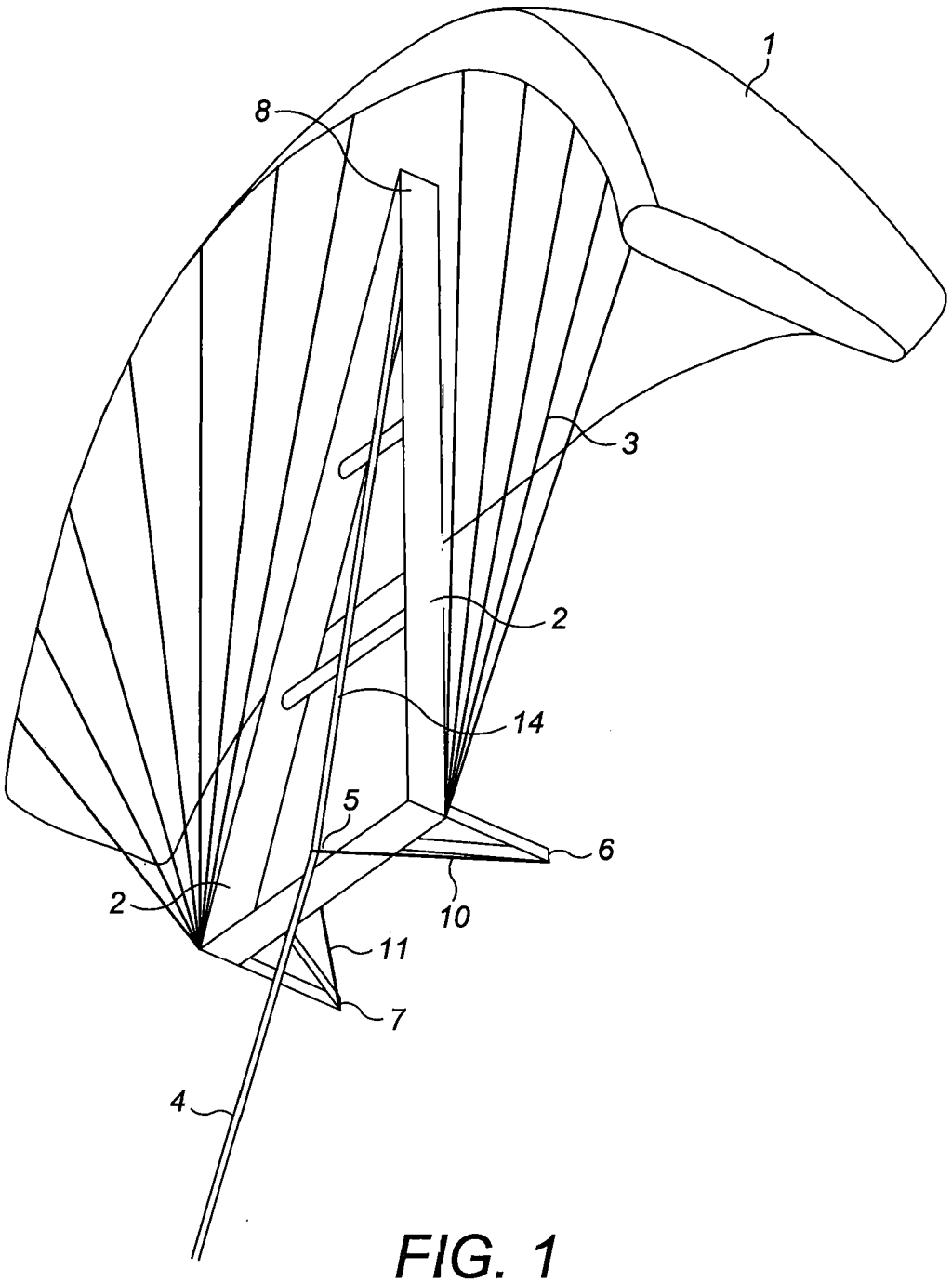

FIG. 1

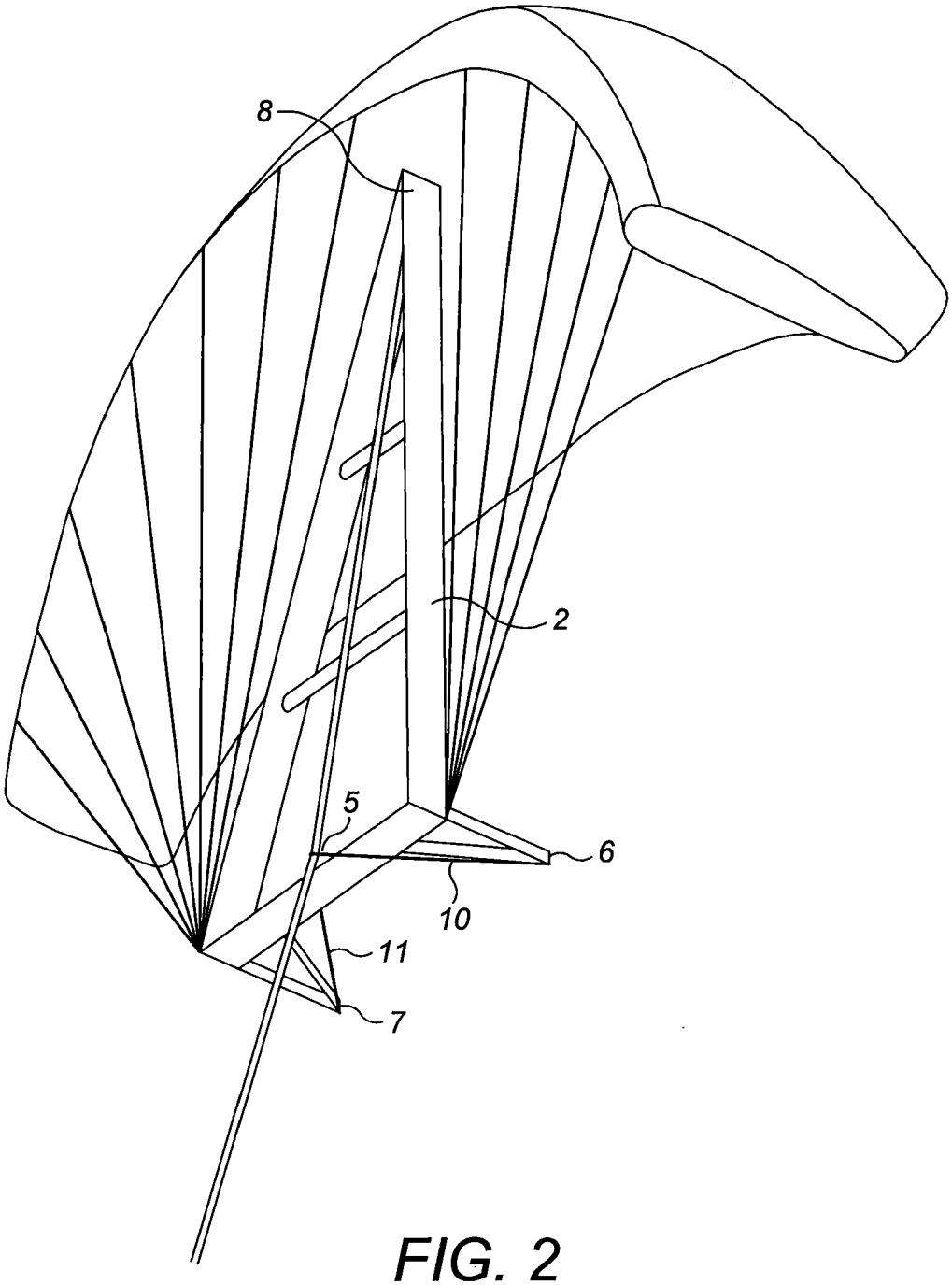

FIG. 2

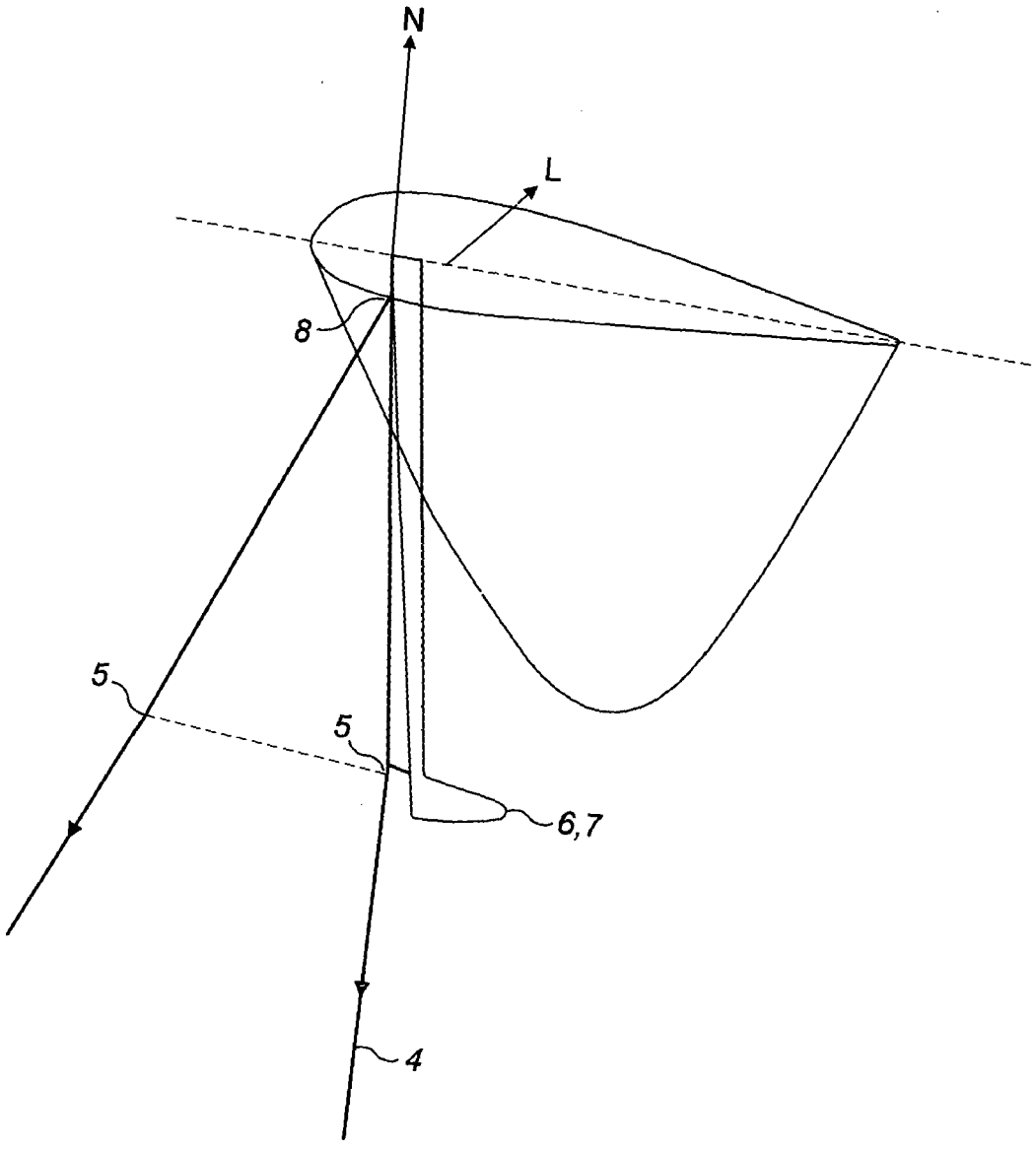

FIG. 3

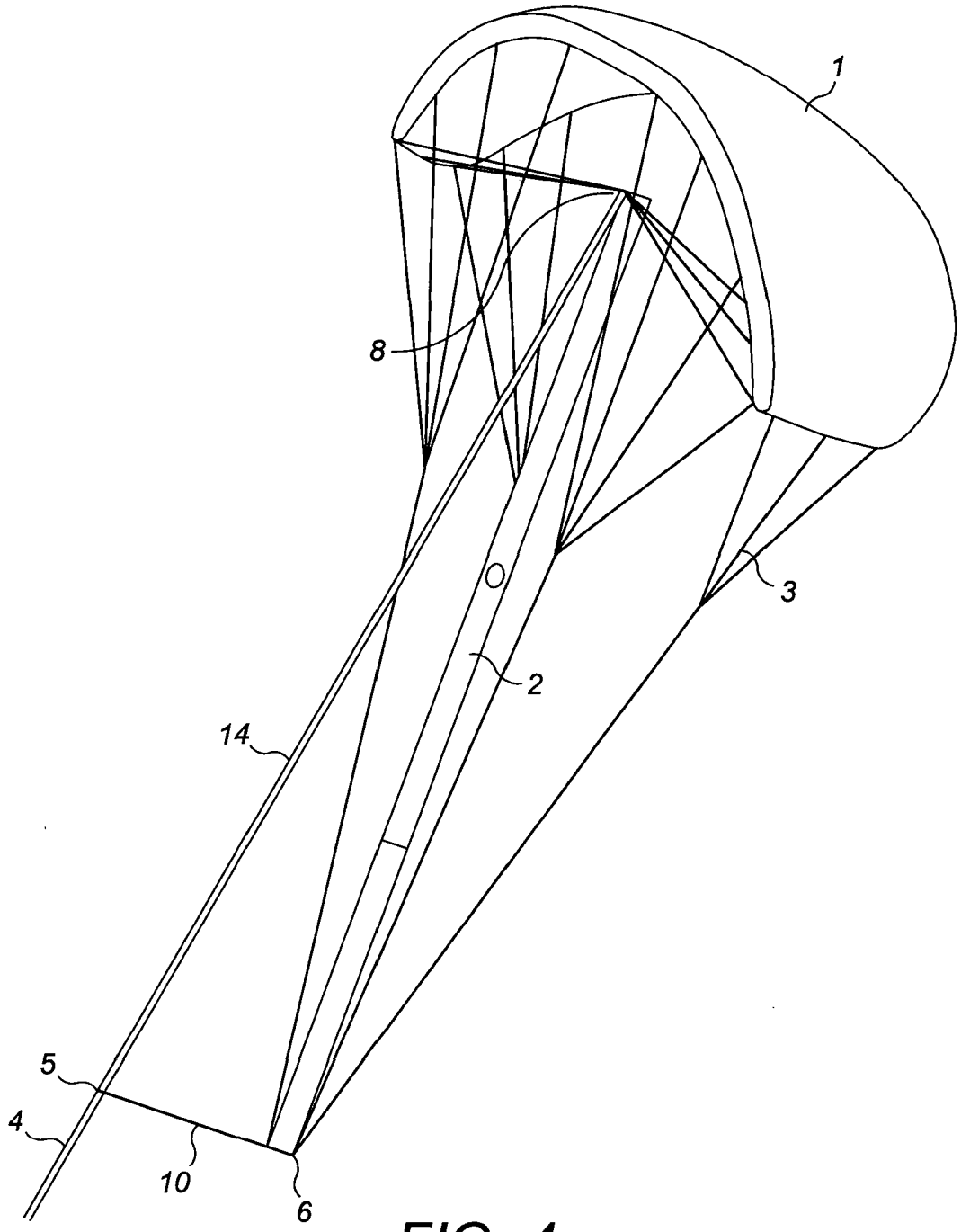

FIG. 4

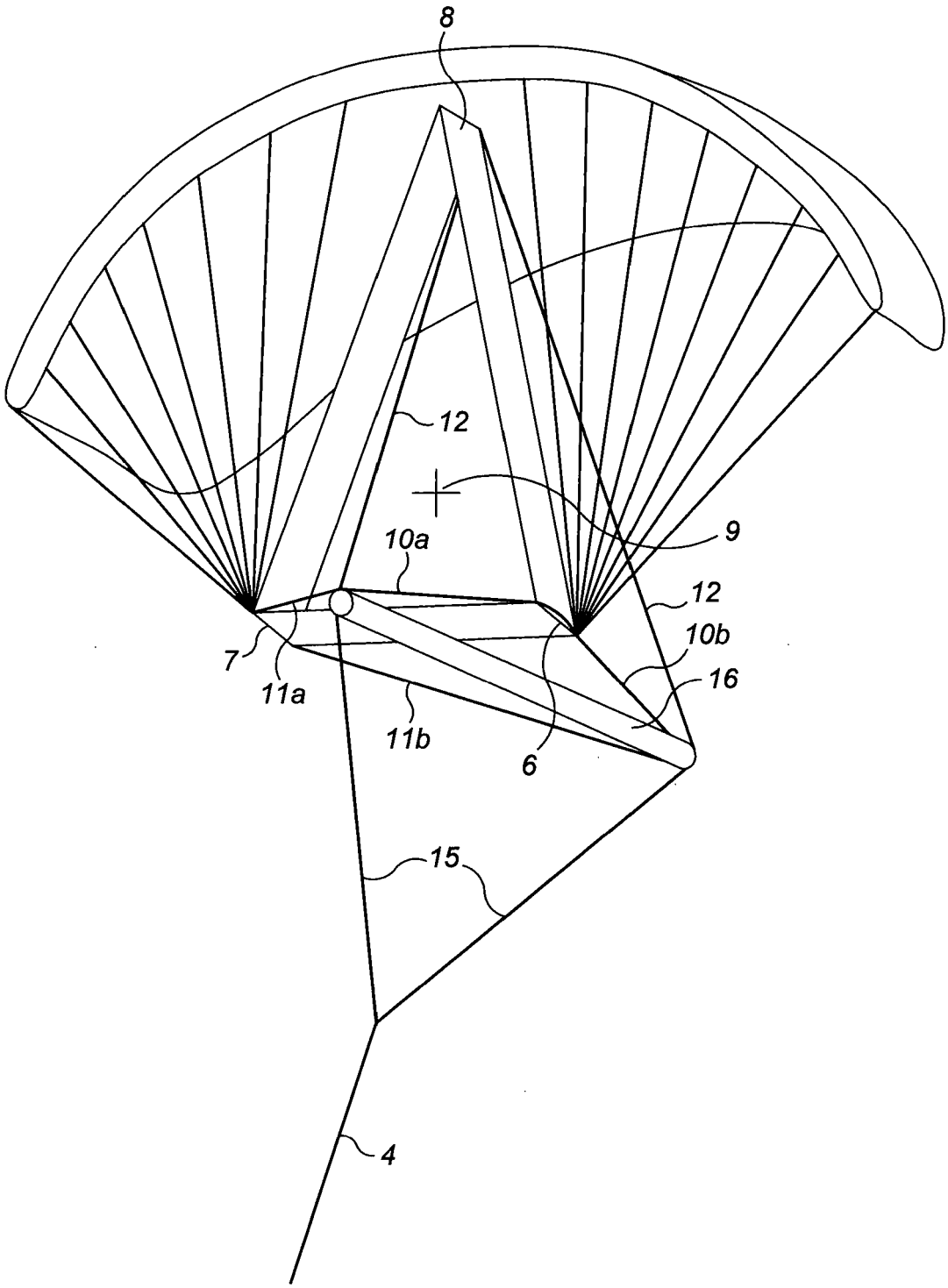

FIG. 5

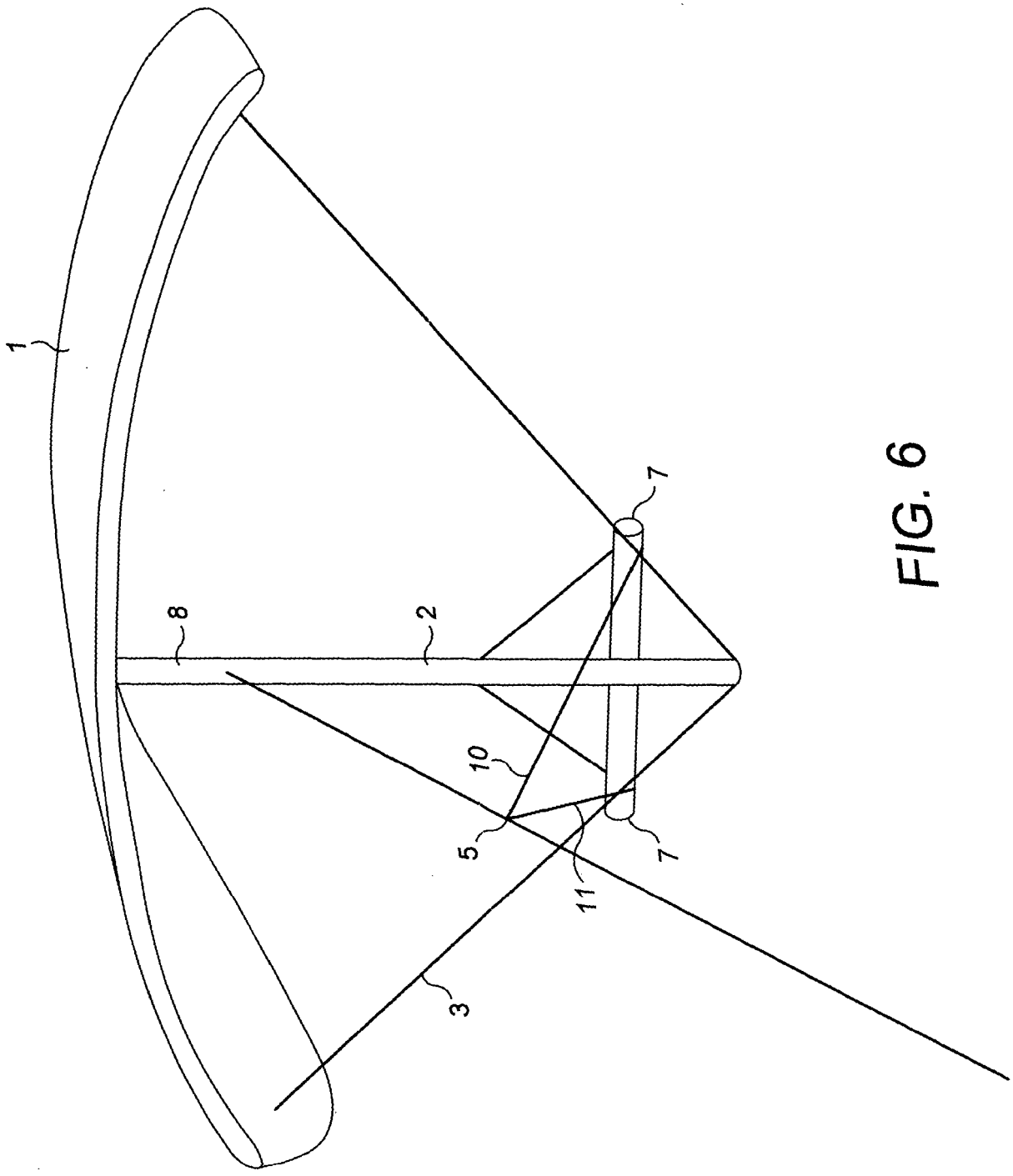

FIG. 6

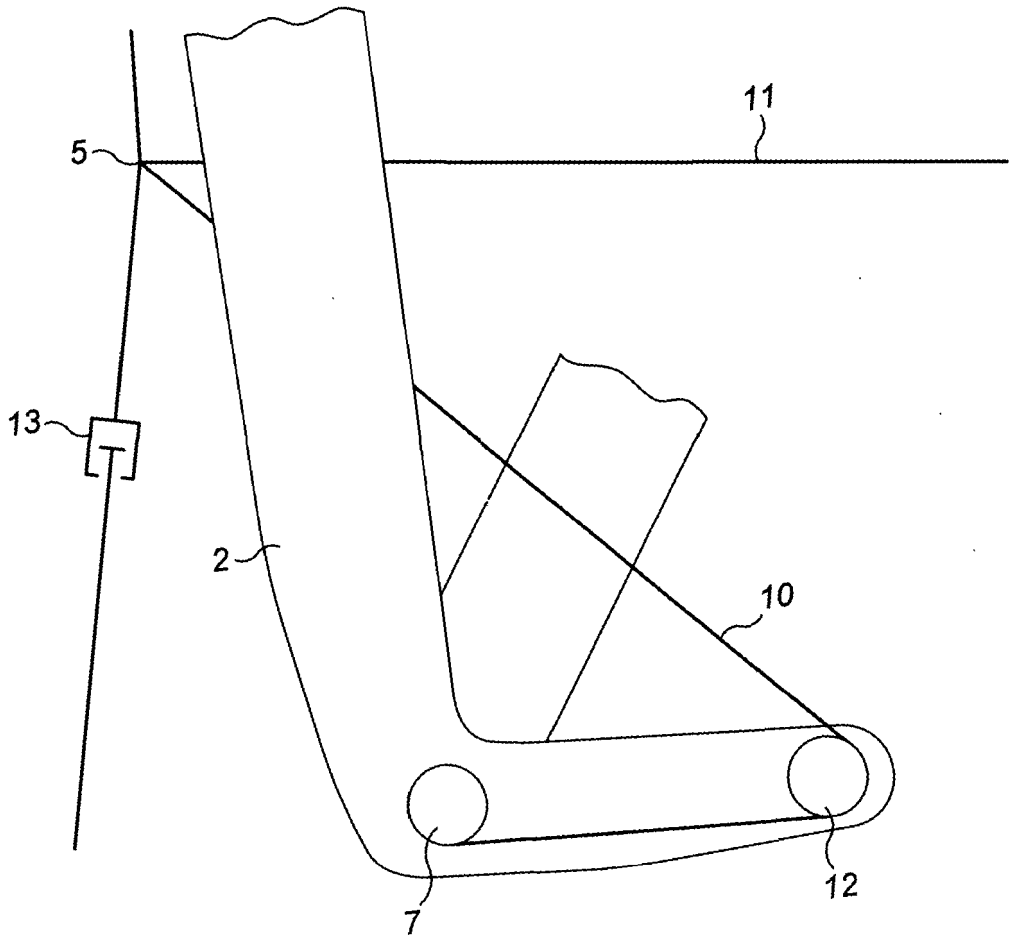

FIG. 7

INTERNATIONAL SEARCH REPORT

International application No
PCT/GB2015/053419

A. CLASSIFICATION OF SUBJECT MATTER
INV. F03D5/00 B64C31/06
ADD.

According to International Patent Classification (IPC) or to both national classification and IPC

B. FIELDS SEARCHED

Minimum documentation searched (classification system followed by classification symbols)
F03D B64C

Documentation searched other than minimum documentation to the extent that such documents are included in the fields searched

Electronic data base consulted during the international search (name of data base and, where practicable, search terms used)
EPO-Internal, WPI Data

C. DOCUMENTS CONSIDERED TO BE RELEVANT

Category*	Citation of document, with indication, where appropriate, of the relevant passages	Relevant to claim No.
A	CN 203 670 096 U (MENG) 25 June 2014 (2014-06-25) paragraph [0018]; figures 1-2 paragraph [0025] -----	1-15
A	US 4 601 443 A (JONES ANDREW W [GB] ET AL) 22 July 1986 (1986-07-22) column 6, line 62 - line 68; figure 9 column 7, line 1 - line 44 -----	1-15
A	WO 2011/121557 A2 (KITENERGY S R L [IT]; MILANESE MARIO [IT]; FAGIANO LORENZO [IT]; GERLE) 6 October 2011 (2011-10-06) page 10 - page 11; figure 3 -----	1-15

☐ Further documents are listed in the continuation of Box C.

☒ See patent family annex.

* Special categories of cited documents :

"A" document defining the general state of the art which is not considered to be of particular relevance

"E" earlier application or patent but published on or after the international filing date

"L" document which may throw doubts on priority claim(s) or which is cited to establish the publication date of another citation or other special reason (as specified)

"O" document referring to an oral disclosure, use, exhibition or other means

"P" document published prior to the international filing date but later than the priority date claimed

"T" later document published after the international filing date or priority date and not in conflict with the application but cited to understand the principle or theory underlying the invention

"X" document of particular relevance; the claimed invention cannot be considered novel or cannot be considered to involve an inventive step when the document is taken alone

"Y" document of particular relevance; the claimed invention cannot be considered to involve an inventive step when the document is combined with one or more other such documents, such combination being obvious to a person skilled in the art

"&" document member of the same patent family

Date of the actual completion of the international search	Date of mailing of the international search report
18 January 2016	01/02/2016

Name and mailing address of the ISA/	Authorized officer
European Patent Office, P.B. 5818 Patentlaan 2 NL - 2280 HV Rijswijk Tel. (+31-70) 340-2040, Fax: (+31-70) 340-3016	Tack, Gaël

1

INTERNATIONAL SEARCH REPORT

Information on patent family members

International application No
PCT/GB2015/053419

Patent document cited in search report	Publication date	Patent family member(s)	Publication date
CN 203670096 U	25-06-2014	NONE	
US 4601443 A	22-07-1986	AU 564537 B2	13-08-1987
		AU 2070883 A	24-04-1984
		DK 265284 A	29-05-1984
		EP 0135501 A1	03-04-1985
		ES 8406961 A1	16-11-1984
		GR 81423 B	11-12-1984
		IT 1207475 B	25-05-1989
		JP S59501742 A	18-10-1984
		NO 842146 A	30-05-1984
		PT 77425 A	01-10-1983
		US 4601443 A	22-07-1986
		WO 8401346 A1	12-04-1984
WO 2011121557 A2	06-10-2011	CA 2794344 A1	06-10-2011
		CN 103038501 A	10-04-2013
		DK 2553262 T3	13-04-2015
		EP 2553262 A2	06-02-2013
		ES 2534776 T3	28-04-2015
		JP 2013527893 A	04-07-2013
		RU 2012146377 A	10-05-2014
		US 2013078097 A1	28-03-2013
		WO 2011121557 A2	06-10-2011